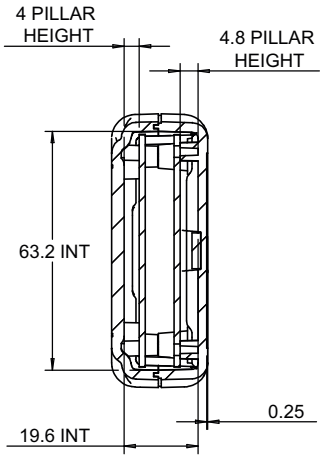

SECTION B-B

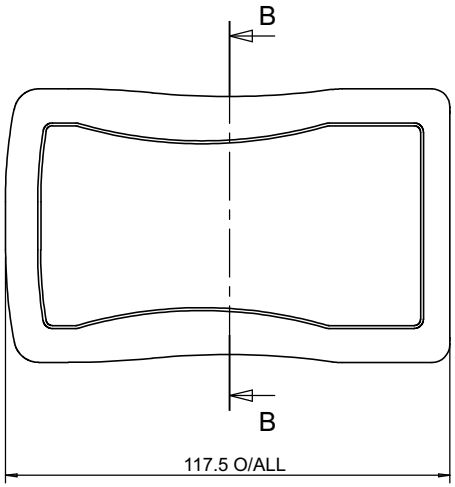

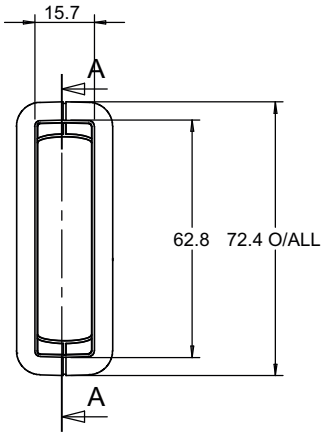

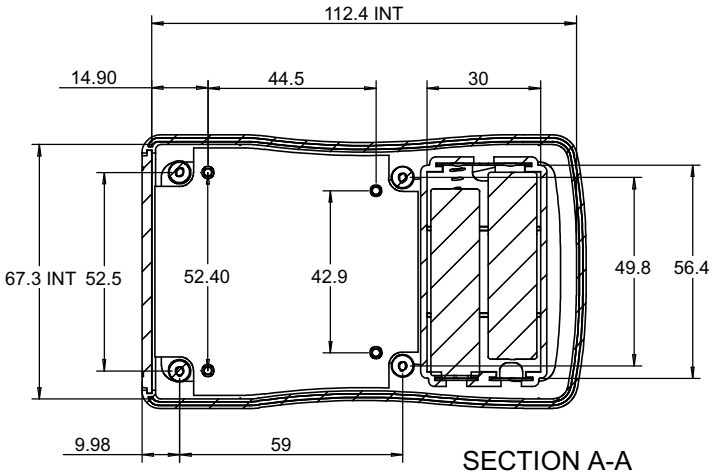

SECTION A-A

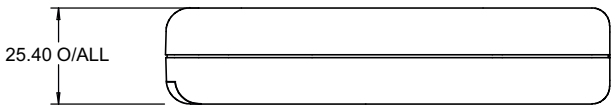

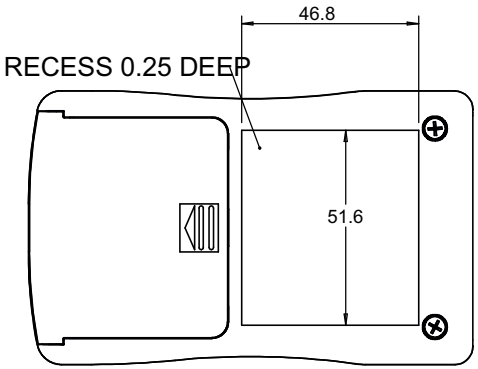

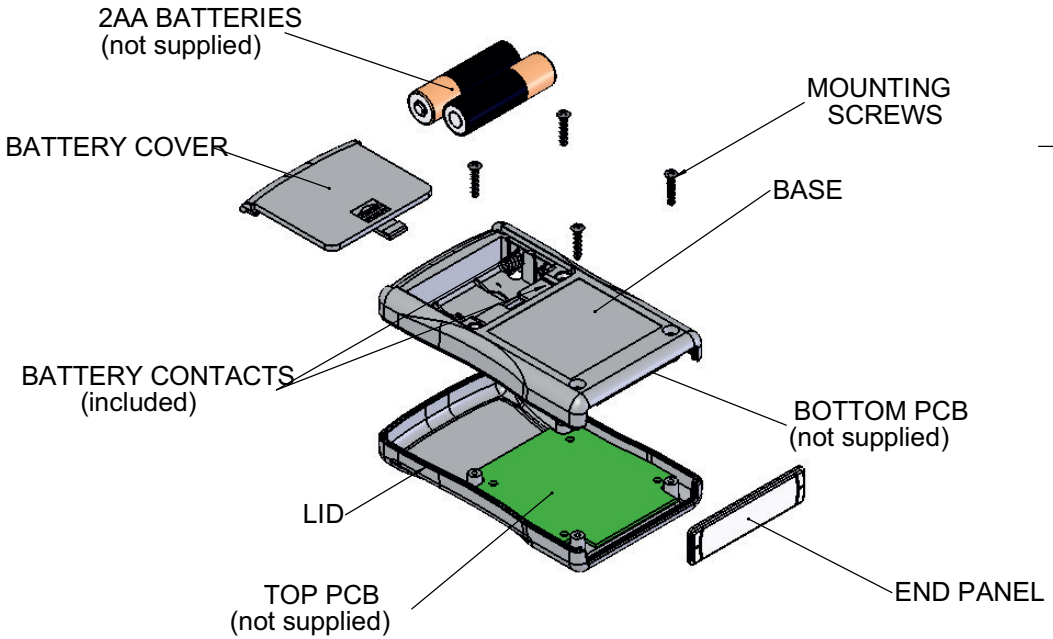

RUBBER BOOT
(OPTIONAL)

CHH451BBK

CHH451BBL

CHH451BRD

CAMDENBOSS ELECTRONICS & ENCLOSURES				UNLESS OTHERWISE SPECIFIED: DIMENSIONS ARE IN MILLIMETERS	DO NOT SCALE DRAWING	REVISION. O
				FINISH. FINE TEXTURE	TITLE: GENERAL ASSEMBLY DRG FOR 45 SERIES PALM CASES	
	NAME	SIGNED	DATE	MATERIAL. UL94-5VA ABS BLACK	DWG NO. CHH451ABK	A4
DRAWN	L SUBKHANKULOVA	LS	05/01/11			
CHK'D	L DROBKA	LS	05/01/11	PROJECTION.	SCALE. 1 : 2	SHEET 1 OF 1